Change to completely Pb-free NTC SMD

For further information, please contact your regional Vishay office.

CONTACT INFORMATION

Americas

Vishay Americas
One Greenwich Place
-
Shelton, CT United States 06484
Phone: 1-402-563-6866
Fax: 1-402-5863-6296
-

Europe

Vishay Electronic GmbH
Dr.-Felix-Zandman-Platz 1
-
Selb Germany 95100
Phone: 49-9287-71-0
Fax: 49-9287-70435
-

Asia

Vishay Intertechnology Asia Pte Ltd
25 Tampines Street 92
Keppel Building #02-00
Singapore Singapore 528877
Phone: 65-788-6688
Fax: 65-788-0988
-

Description of Change: Vishay has the intention to phase out all lead (Pb) content in NTC SMD components, including Pb currently permitted under RoHS exemptions, and convert to fully Pb-free alternatives.

Reason for Change: To be compliant with EU regulations, Efficiency in Production of NTC SMD

Expected Influence on Quality/Reliability/Performance: None

Part Numbers/Series/Families Affected: Please see materials list on the succeeding page.

Vishay Brand(S): Vishay BCcomponents

Time Schedule:

Start Shipment Date: Thursday April 1, 2027

Sample Availability: Samples available on request

Product Identification: By date code, label, lot number

Qualification Data: Available upon request

This PCN is considered approved, without further notification, unless we receive specific customer concerns before Thursday December 31, 2026 or as specified by contract.

Issued By: Tilly Laurent, tilly.laurent@vishay.com

© 2021 VISHAY INTERTECHNOLOGY, INC. ALL RIGHTS RESERVED.

THIS DOCUMENT IS SUBJECT TO CHANGE WITHOUT NOTICE. THE PRODUCTS DESCRIBED HEREIN AND THIS DOCUMENT ARE SUBJECT TO SPECIFIC DISCLAIMERS, SET FORTH AT www.vishay.com/doc?91000

NTCS0402E3103FL1T	NTCS0402E3103FLT	NTCS0402E3103GL1T	NTCS0402E3103GLT	NTCS0402E3103HHT
NTCS0402E3103HL1T	NTCS0402E3103HLT	NTCS0402E3103JHT	NTCS0402E3103JL1T	NTCS0402E3103JLT
NTCS0402E3104FHT	NTCS0402E3104FXT	NTCS0402E3104GHT	NTCS0402E3104GXT	NTCS0402E3104HHT
NTCS0402E3104HXT	NTCS0402E3104JHT	NTCS0402E3104JXT	NTCS0402E3153HHT	NTCS0402E3153JHT
NTCS0402E3214SMT	NTCS0402E3223HMT	NTCS0402E3223JMT	NTCS0402E3333HMT	NTCS0402E3333JMT
NTCS0402E3472HMT	NTCS0402E3472JMT	NTCS0402E3473FXT	NTCS0402E3473GXT	NTCS0402E3473HXT
NTCS0402E3473JXT	NTCS0402E3474HHT	NTCS0402E3474JHT	NTCS0402E3683HHT	NTCS0402E3683JHT
NTCS0402E3C90044	NTCS0402E3C90045	NTCS0603E3102HLT	NTCS0603E3102JLT	NTCS0603E3103FHT
NTCS0603E3103FLT	NTCS0603E3103FMT	NTCS0603E3103GHT	NTCS0603E3103GLT	NTCS0603E3103GMT
NTCS0603E3103HHT	NTCS0603E3103HLT	NTCS0603E3103HMT	NTCS0603E3103JHT	NTCS0603E3103JLT
NTCS0603E3103JMT	NTCS0603E3104FXT	NTCS0603E3104GXT	NTCS0603E3104HXT	NTCS0603E3104JXT
NTCS0603E3124SMT	NTCS0603E3152HLT	NTCS0603E3152JLT	NTCS0603E3153FMT	NTCS0603E3153GMT
NTCS0603E3153HMT	NTCS0603E3153JMT	NTCS0603E3202FLT	NTCS0603E3202GLT	NTCS0603E3202HLT
NTCS0603E3202JLT	NTCS0603E3222FMT	NTCS0603E3222GMT	NTCS0603E3222HMT	NTCS0603E3222JMT
NTCS0603E3223FMT	NTCS0603E3223HMT	NTCS0603E3223JMT	NTCS0603E3272FMT	NTCS0603E3272GMT
NTCS0603E3272HMT	NTCS0603E3272JMT	NTCS0603E3333FHT	NTCS0603E3333GHT	NTCS0603E3333HHT
NTCS0603E3333JHT	NTCS0603E3472FHT	NTCS0603E3472GHT	NTCS0603E3472HHT	NTCS0603E3472JHT
NTCS0603E3473FHT	NTCS0603E3473GHT	NTCS0603E3473HHT	NTCS0603E3473JHT	NTCS0603E3502FLT
NTCS0603E3502GLT	NTCS0603E3502HLT	NTCS0603E3502JLT	NTCS0603E3683FHT	NTCS0603E3683GHT
NTCS0603E3683HHT	NTCS0603E3683JHT	NTCS0603E3C90047	NTCS0603E3C90048	NTCS0805E3102HLT
NTCS0805E3102JLT	NTCS0805E3103FHT	NTCS0805E3103FLT	NTCS0805E3103FMT	NTCS0805E3103GHT
NTCS0805E3103GLT	NTCS0805E3103GMT	NTCS0805E3103HHT	NTCS0805E3103HLT	NTCS0805E3103HMT
NTCS0805E3103JHT	NTCS0805E3103JLT	NTCS0805E3103JMT	NTCS0805E3104FMT	NTCS0805E3104FXT
NTCS0805E3104GMT	NTCS0805E3104GXT	NTCS0805E3104HMT	NTCS0805E3104HXT	NTCS0805E3104JMT
NTCS0805E3104JXT	NTCS0805E3104SMT	NTCS0805E3152HLT	NTCS0805E3152JLT	NTCS0805E3153FMT
NTCS0805E3153GMT	NTCS0805E3153HMT	NTCS0805E3153JMT	NTCS0805E3222FMT	NTCS0805E3222GMT
NTCS0805E3222HMT	NTCS0805E3222JMT	NTCS0805E3223FHT	NTCS0805E3223HHT	NTCS0805E3223JHT
NTCS0805E3333FHT	NTCS0805E3333GHT	NTCS0805E3333HHT	NTCS0805E3333JHT	NTCS0805E3334FHT
NTCS0805E3334GHT	NTCS0805E3334HHT	NTCS0805E3334JHT	NTCS0805E3472FMT	NTCS0805E3472GMT
NTCS0805E3472HMT	NTCS0805E3472JMT	NTCS0805E3473FHT	NTCS0805E3473GHT	NTCS0805E3473HHT
NTCS0805E3473JHT	NTCS0805E3474FXT	NTCS0805E3474GXT	NTCS0805E3474HXT	NTCS0805E3474JXT
NTCS0805E3502FLT	NTCS0805E3502GLT	NTCS0805E3502HLT	NTCS0805E3502JLT	NTCS0805E3683FXT
NTCS0805E3683HXT	NTCS0805E3683JXT	NTCS0805E3684FXT	NTCS0805E3684HXT	NTCS0805E3684JXT
NTCS0805E3C90006	NTCS0805E3C90016	NTCS0805E3C90021	NTCS0805E3C90025	NTCS0805E3C90028
NTCS0805E3C90031	NTCS0805E3C90032			

© 2021 VISHAY INTERTECHNOLOGY, INC. ALL RIGHTS RESERVED.

THIS DOCUMENT IS SUBJECT TO CHANGE WITHOUT NOTICE. THE PRODUCTS DESCRIBED HEREIN AND THIS DOCUMENT ARE SUBJECT TO SPECIFIC DISCLAIMERS, SET FORTH AT www.vishay.com/doc?91000

Product Change Notification

Product Group: Vishay Passives / CC and NLR / **September 28th, 2026** / **PCN-NLR-013-2026 Rev 0**

Change to completely Pb-free NTC SMD

DESCRIPTION OF CHANGE: Vishay has the intention to phase out all lead (Pb) content in NTC SMD components, including Pb currently permitted under RoHS exemptions, and convert to fully Pb-free alternatives.

CLASSIFICATION OF CHANGE: Major

REASON FOR CHANGE: To be compliant with EU regulations**,** Efficiency in Production of NTC SMD

EXPECTED INFLUENCE ON QUALITY/RELIABILITY/PERFORMANCE: None.

PRODUCT CATEGORY: Resistors, Non-Linear, NTC

PART NUMBERS/SERIES/FAMILIES AFFECTED:
NTCS0402...
NTCS0603...
NTCS0805...

VISHAY BRAND(s): Vishay BCc

TIME SCHEDULE:
Start Manufacturing with Pb-free NTC SMD : **April, 1st 2027**
Customers can expect a transition period of approximately 4 to 8 months, during which both Pb-free and Pb-bearing products may be received, depending on market conditions. The products can be differentiated by the Pb-free logo on the packaging and by the brightness level of the components.

SAMPLE AVAILABILITY: Available upon request

PRODUCT IDENTIFICATION: By date code, label, lot number.

QUALIFICATION DATA: Available upon request.

This PCN is considered approved, without further notification, unless we receive specific customer concerns before December, 31st, 2026 **or as specified by contract.**

ISSUED BY: Tilly Laurent, tilly.laurent@vishay.com

For further information, please contact your regional Vishay office.

CONTACT INFORMATION:

The Americas
Vishay Americas
One Greenwich Place
Shelton, CT
06484
United States
Phone: 1-402-563-6866
Fax : 1-402-5863-6296

Europe
Vishay Electronic GmbH
Dr.-Felix-Zandman-Platz 1
Selb
D-95100
Germany
Phone: 49-9287-71-0
Fax : 49-9287-70435

Asia
Vishay Intertechnology Asia Pte Ltd
25 Tampines Street 92
Keppel Building #02-00
528877
Singapore
Phone: 65-788-6688
Fax : 65-788-0988

PCN-NLR-013-2026 : Change to Pb-free NTC SMD

TL 28/09/2026

Pb-bearing NTC SMD

Part	Substance	Cas number	weight %
Glass cover (5)	Lead(2+)-silicate	10099-76-0	64%
	Glass without declarable substances	-	36%
Glass Ag Termination (2a)	Silver	7440-22-4	92%
	Lead(2+)-silicate	10099-76-0	5.8%
	Glass without declarable substances	-	2.2%

ROHS Compliant with exemption 7c-I
REACH compliant

Pb-free NTC SMD

Part	Substance
Glass cover (5)	Glass without declarable substances
Glass Ag Termination (2a)	Silver
	Glass without declarable substances
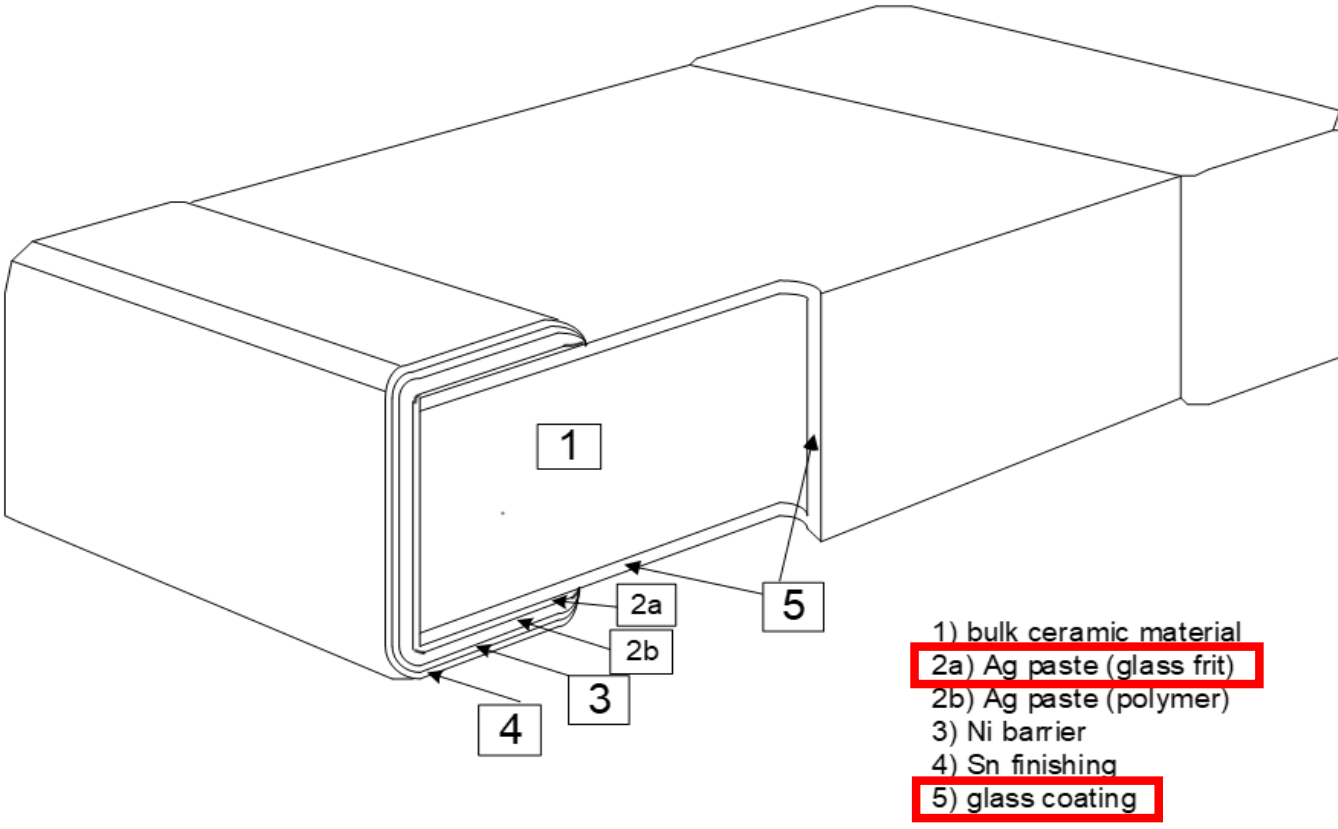
Full ROHS Compliant (no exemptions)
REACH compliant